Uninterruptible power supply - TRIO-UPS-2G/1AC/24DC/5 - 2907160

Please be informed that the data shown in this PDF Document is generated from our Online Catalog. Please find the complete data in the user's documentation. Our General Terms of Use for Downloads are valid
(http://phoenixcontact.com/download)

Uninterruptible power supply with integrated power supply unit. For lead AGM energy storage with 1.3 Ah to 12 Ah nominal capacity. Input: 1-phase, output: 24 V DC/5 A. Push-in connection technology

Product Description

Supply DC loads reliably and save space with the TRIO uninterruptible power supplies. An input grid is no longer necessary for startup. Connected industrial PCs can be shut down easily via the integrated USB interface.

Your advantages

- Space saving: Combination of UPS module and power supply in the same housing
- Long buffer times, thanks to large selection of VRLA energy storage systems
- USB interface for connection to higher-level controllers such as industrial PCs
- Startup from energy storage possible, even without mains input
- Universal range of possible applications, thanks to a comprehensive package of approvals and an extended temperature range
- Easy installation, thanks to push-in connection technology

RoHS

Key Commercial Data

Packing unit	1 pc
GTIN	4 055626 166575
GTIN	4055626166575

Technical data

Note

Utilization restriction	EMC: class A product, see manufacturer's declaration in the download area

Dimensions

Width	60 mm
Height	130 mm
Depth	115 mm
Width with alternative assembly	115 mm
Height with alternative assembly	130 mm

Uninterruptible power supply - TRIO-UPS-2G/1AC/24DC/5 - 2907160

Technical data

Dimensions

Depth with alternative assembly	60 mm

Ambient conditions

Degree of protection	IP20
Ambient temperature (operation)	-25 °C ... 70 °C (> 60 °C Derating: 2.5 %/K)
Ambient temperature (start-up type tested)	-40 °C
Ambient temperature (storage/transport)	-40 °C ... 85 °C
Max. permissible relative humidity (operation)	≤ 95 % (At +25°C, non-condensing)
Climatic class	3K3 (in acc. with EN 60721)
Degree of pollution	2
Installation height	≤ 4000 m (> 2000 m, observe derating)

Input data

AC input voltage range	100 V AC ... 240 V AC -15 % ... +10 %
Inrush current limiting/I²t	< 0.43 A^2s
Mains buffering time	≥ 15 ms (120 V AC)
Typical response time	60 ms
Input fuse, integrated	6.3 A (slow-blow, internal)

Output data

Nominal output voltage	24 V DC
Setting range of the output voltage (U_{Set})	24 V DC ... 28 V DC (> 24 V constant capacity)
Nominal output current (I_N)	5 A
Dynamic Boost ($I_{Dyn.Boost}$)	7.5 A
Derating	> 60 °C (2.5%/K of P_{Out} nom.)
Control deviation	< 0.75 % (Static load change 10 % ... 90 %)
Maximum power dissipation in no-load condition	< 3 W (230 V AC)
Efficiency	typ. 85 % (120 V AC)
	typ. 87 % (230 V AC)
	typ. 96 % (Battery operation)
Residual ripple	< 20 mV
Connection in parallel	yes, with diode module uncoupled
Surge protection against internal surge voltages	< 30 V DC
Feedback voltage resistance	≤ 35 V DC

General

Net weight	0.75 kg
Insulation voltage input/output	3 kV AC (type test)
	1.5 kV AC (routine test)
Protection class	I
MTBF (IEC 61709, SN 29500)	> 1395470 h (230 V AC, at 25 °C)
	> 825726 h (230 V AC, at 40 °C)
	> 388314 h (230 V AC, at 60 °C)

Uninterruptible power supply - TRIO-UPS-2G/1AC/24DC/5 - 2907160

Technical data

General

Mounting position	horizontal DIN rail NS 35, EN 60715
Assembly instructions	alignable: horizontally 0 mm, vertically 50 mm

Connection data, input

Connection method	Push-in connection
Conductor cross section solid min.	0.2 mm²
Conductor cross section solid max.	4 mm²
Conductor cross section flexible min.	0.2 mm²
Conductor cross section flexible max.	2.5 mm²
Conductor cross section AWG min.	24
Conductor cross section AWG max.	12
Stripping length	10 mm

Connection data, output

Connection method	Push-in connection
Conductor cross section solid min.	0.2 mm²
Conductor cross section solid max.	4 mm²
Conductor cross section flexible min.	0.2 mm²
Conductor cross section flexible max.	2.5 mm²
Conductor cross section AWG min.	24
Conductor cross section AWG max.	12
Stripping length	10 mm

Connection data for signaling

Connection method	Push-in connection
Conductor cross section solid min.	0.2 mm²
Conductor cross section solid max.	1.5 mm²
Conductor cross section flexible min.	0.2 mm²
Conductor cross section flexible max.	1.5 mm²
Conductor cross section AWG min.	24
Conductor cross section AWG max.	16
Stripping length	8 mm

Charging process

Charge characteristic curve	IU_0U
Charge current	0.2 A ... 1.5 A (-25 °C ... 60 °C)

Standards

EMC requirements for noise immunity	EN 61000-6-1
	EN 61000-6-2
EMC requirements for noise emission	EN 61000-6-3
	EN 61000-6-4
Standard - safety for equipment for measurement, control, and laboratory use	IEC 61010-1

Uninterruptible power supply - TRIO-UPS-2G/1AC/24DC/5 - 2907160

Technical data

Standards

Standard – Safety extra-low voltage	IEC 61010 (SELV) / (PELV)
Standard - Safe isolation	DIN VDE 0100-410
Standard - power supply devices for low voltage with DC output	EN 61204-3

Conformance/approvals

UL approvals	UL Listed UL 61010
	UL/C-UL Listed ANSI/ISA-12.12.01 Class I, Division 2, Groups A, B, C

EMC data

Electromagnetic compatibility	Conformance with EMC Directive 2014/30/EU
Low Voltage Directive	Conformance with Low Voltage Directive 2014/35/EC
Conducted noise emission	EN 61000-6-3 (Class B)
Noise emission	EN 61000-6-3 (Class B)
DNV GL conducted interference	Class B
Additional text	Area power distribution
DNV GL noise radiation	Class B
Additional text	Bridge and deck area
Electrostatic discharge	EN 61000-4-2
Contact discharge	6 kV (Test Level 4)
Discharge in air	8 kV (Test Level 4)
Electromagnetic HF field	EN 61000-4-3
Frequency range	80 MHz ... 6 GHz
Test field strength	10 V/m (Test Level 3)
Comments	Criterion B
Fast transients (burst)	EN 61000-4-4
Input	4 kV (Test Level 4 - asymmetrical)
Output	2 kV (Test Level 3 - asymmetrical)
Signal	1 kV (Test Level 4 - asymmetrical)
Comments	Criterion B
Input	2 kV (Test Level 3 - symmetrical)
	4 kV (Test Level 4 - asymmetrical)
Output	1 kV (Test Level 1 - symmetrical)
	2 kV (Test Level 3 - asymmetrical)
Signal	1 kV (Test Level 2 - asymmetrical)
Comments	Criterion B
Conducted interference	EN 61000-4-6
I/O/S	asymmetrical
Frequency range	0.15 MHz ... 80 MHz
Voltage	10 V (Test Level 3)
Comments	Criterion A
Attenuated sinusoidal oscillations (ring wave)	EN 61000-4-12
Input	2 kV (symmetrical)

Uninterruptible power supply - TRIO-UPS-2G/1AC/24DC/5 - 2907160

Technical data

EMC data

	4 kV (asymmetrical)
Comments	Criterion B
Criterion A	Normal operating behavior within the specified limits.
Criterion B	Temporary impairment to operational behavior that is corrected by the device itself.

Environmental Product Compliance

REACh SVHC	Lead 7439-92-1

Drawings

Block diagram

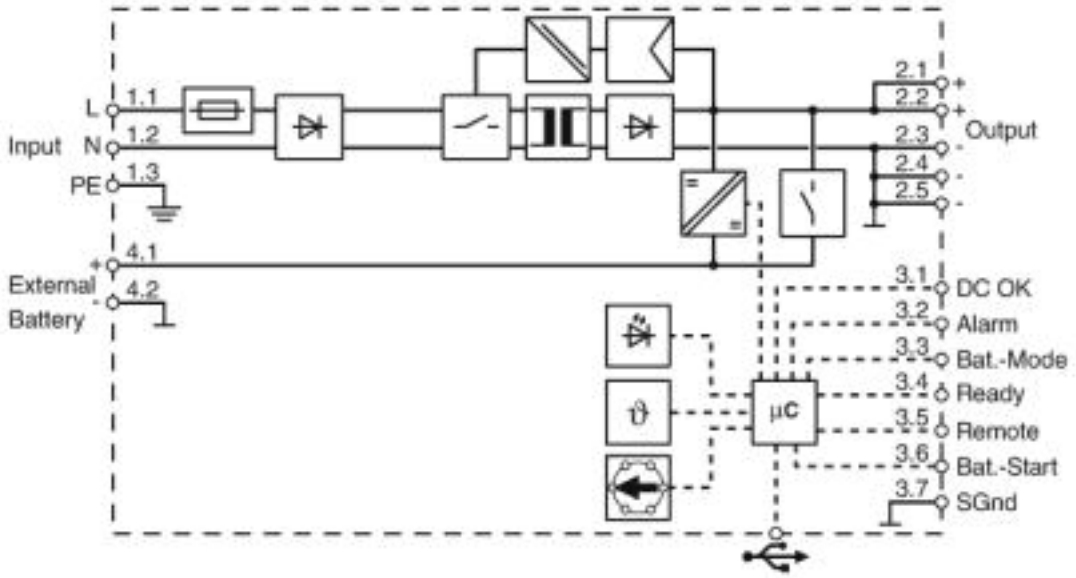

Approvals

Approvals

Approvals

DNV GL / BSH / UL Listed / cUL Recognized / cUL Listed / EAC / cULus Listed

Ex Approvals

UL Listed / cUL Listed / cULus Listed

Approval details

Uninterruptible power supply - TRIO-UPS-2G/1AC/24DC/5 - 2907160

Approvals

DNV GL		https://approvalfinder.dnvgl.com/	TAA00002DW
BSH		http://www.bsh.de/de/index.jsp	1025a
UL Listed		http://database.ul.com/cgi-bin/XYV/template/LISEXT/1FRAME/index.htm	FILE E 123528
cUL Recognized		http://database.ul.com/cgi-bin/XYV/template/LISEXT/1FRAME/index.htm	FILE E 214596
cUL Listed		http://database.ul.com/cgi-bin/XYV/template/LISEXT/1FRAME/index.htm	FILE E 123528
EAC			RU C-DE.A*30.B.01082
cULus Listed			

Phoenix Contact 2019 © - all rights reserved
http://www.phoenixcontact.com

PHOENIX CONTACT GmbH & Co. KG
Flachsmarktstr. 8
32825 Blomberg
Germany
Tel. +49 5235 300
Fax +49 5235 3 41200
http://www.phoenixcontact.com